www.sep-barge.com

CREATION OF VALUE EXCELLENT

MYUNG IL



MYUNG IL, We pioneer the future
with a creative and challenging spirit

MYUNG IL
JACKUP OFFSHORE CO.,LTD

MYUNG IL

WE ADD TO OUR CUSTOMERS' SUCCESS
BY HELPING THEM CREATE NEW VALUE



CEO MESSAGE

Myung Il Jack-up Offshore Co., Ltd. is the world's leading manufacturer of jack-up platforms and marine equipment. Since our founding in 1998, we have achieved customer satisfaction through our unique technology and high-quality standards.

We specialize in producing modular jack-up platforms and jacking gear systems designed primarily for offshore platforms, barges, rigs, and wind turbine support structures. Our jacking systems are categorized into clamp type, key type, and rack-and-pinion gear type, each tailored to meet the specific capacity requirements of the platform.

Customer satisfaction is our top priority, and we achieve it through superior technology and exceptional quality. Thank you for your trust and support as we continue to lead the industry with innovation and reliability.

MYUNG IL PRESIDENT
KIM, Mun-Young

mun yong Kim

NAME
Myung Il Jack-up Offshore Co., Ltd.

ADDRESS
4, Saemangeumsandan 1-ro,
Gunsan-si, Jeollabuk-do, Korea

TEL & FAX
Tel : +82-63-464-1700
Fax : +82-63-464-1701

E-MAIL
mijo@sep-barge.com

PRODUCT DESCRIPTION FOR MODULAR JACK-UP BARGE

MODULAR DESCRIPTION

MI-85H

GENERAL		
TYPE		hydraulic
CLASSIFICATION		none
MODEL		MI-85H
SPUD GENERAL		
LENGTH		24 m
DIAMETER		Ø355.6 mm
Q'TY	9m*2+6m*1	4 unit
HYDRAULIC SYSTEM		
JACKING SPEED		15 m/hour
JACKING STROKE		1.05 m
MAX. DECKLOAD		1 ton/m^2
WORKING AREA		70 m^2
MAX. PAY-LOAD		8 ton
SURVIVAL CONDITIONS		
MAX. WATER DEPTH		18 m
WIND VELOCITY		5.5 ~ 7.9 m/sec
MAX. WAVE HEIGHT		1 ~ 2 m
CURRENT VELOCITY		4 knot
MAIN PLATFORM DIMENSIONS		
LENGTH		9 m
WIDTH		9 m
DEPTH		1.37 m
DRAFT		0.6 m
OPERATING CONDITIONS		
MAX. WATER DEPTH		18 m
WIND VELOCITY		3.4 ~ 5.4 m/sec
MAX. WAVE HEIGHT		0.5 ~ 1.0 m
CURRENT VELOCITY		4 knot
MOORING SYSTEM (OPTIONAL)		
WINCH		4 ea
ANCHOR		4 ea
POWER PACK		
POWER PACK		1 unit

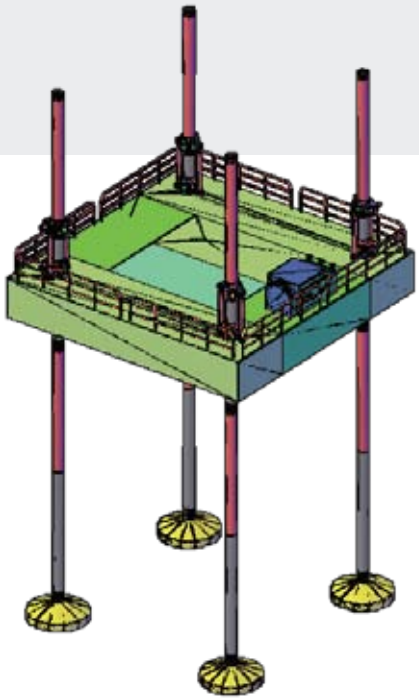

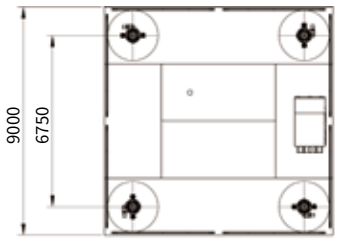

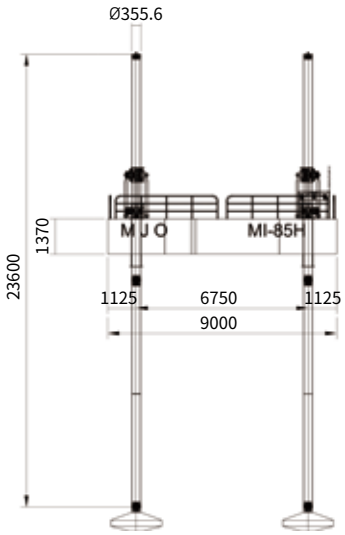

PRODUCT DESCRIPTION FOR MODULAR JACK-UP BARGE

MODULAR DESCRIPTION

MI-100H

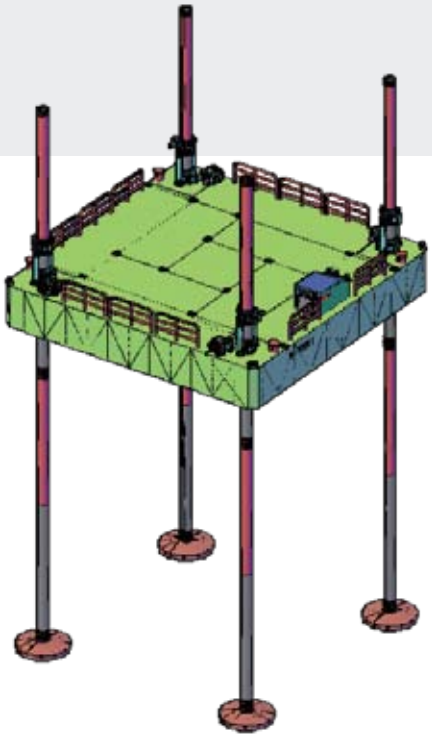

GENERAL		
TYPE		hydraulic
CLASSIFICATION		none
MODEL		MI-100H
SPUD GENERAL		
LENGTH		33 m
DIAMETER		Ø406 mm
Q'TY	11m*3	4 unit
HYDRAULIC SYSTEM		
JACKING SPEED		20 m/hour
JACKING STROKE		1 m
MAX. DECKLOAD		1 ton/m^2
WORKING AREA		100 m^2
MAX. PAY-LOAD		11 ton
SURVIVAL CONDITIONS		
MAX. WATER DEPTH		22 m
WIND VELOCITY		5.5 ~ 7.9 m/sec
MAX. WAVE HEIGHT		1 ~ 2 m
CURRENT VELOCITY		4 knot
MAIN PLATFORM DIMENSIONS		
LENGTH		11 m
WIDTH		11 m
DEPTH		1.63 m
DRAFT		1 m
OPERATING CONDITIONS		
MAX. WATER DEPTH		22 m
WIND VELOCITY		3.4 ~ 5.4 m/sec
MAX. WAVE HEIGHT		0.5 ~ 1.0 m
CURRENT VELOCITY		4 knot
MOORING SYSTEM (OPTIONAL)		
WINCH		4 ea
ANCHOR		4 ea
POWER PACK		
POWER PACK		1 unit

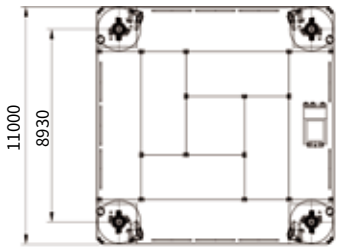

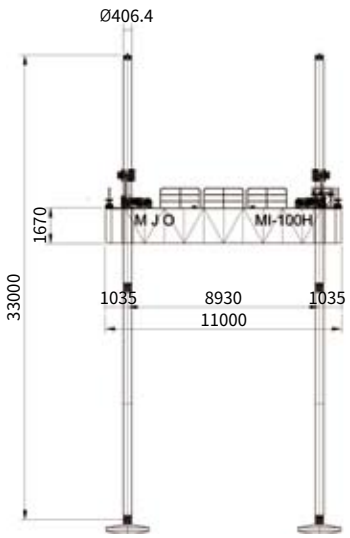

PRODUCT DESCRIPTION FOR MODULAR JACK-UP BARGE

MODULAR DESCRIPTION

MI-100HS

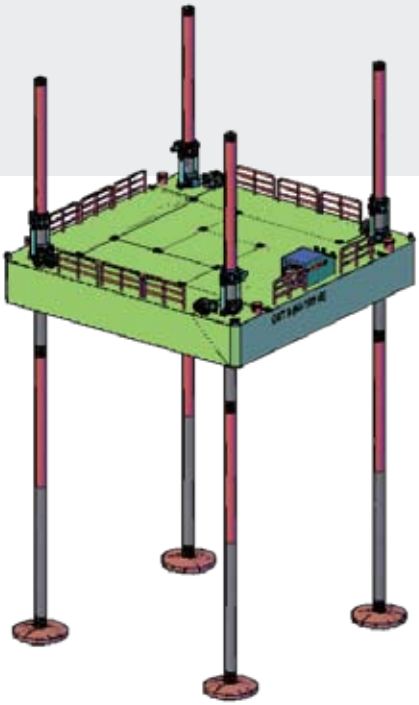

GENERAL		
TYPE		hydraulic
CLASSIFICATION		none
MODEL		MI-100HS
SPUD GENERAL		
LENGTH		36 m
DIAMETER		Ø457 mm
Q'TY	11m*3	4 unit
HYDRAULIC SYSTEM		
JACKING SPEED		10 m/hour
JACKING STROKE		1.05 m
MAX. DECKLOAD		1.3 ton/m^2
WORKING AREA		120 m^2
MAX. PAY-LOAD		18 ton
SURVIVAL CONDITIONS		
MAX. WATER DEPTH		22 m
WIND VELOCITY		5.5 ~ 7.9 m/sec
MAX. WAVE HEIGHT		1 ~ 2 m
CURRENT VELOCITY		4 knot
MAIN PLATFORM DIMENSIONS		
LENGTH		12 m
WIDTH		12 m
DEPTH		1.7 m
DRAFT		1 m
OPERATING CONDITIONS		
MAX. WATER DEPTH		30 m
WIND VELOCITY		3.4 ~ 5.4 m/sec
MAX. WAVE HEIGHT		0.5 ~ 1.0 m
CURRENT VELOCITY		4 knot
MOORING SYSTEM (OPTIONAL)		
WINCH		4 ea
ANCHOR		4 ea
POWER PACK		
POWER PACK		1 unit

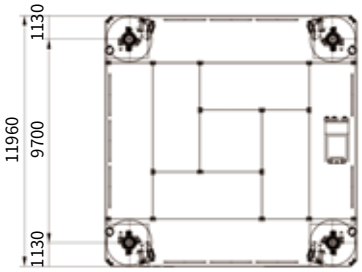

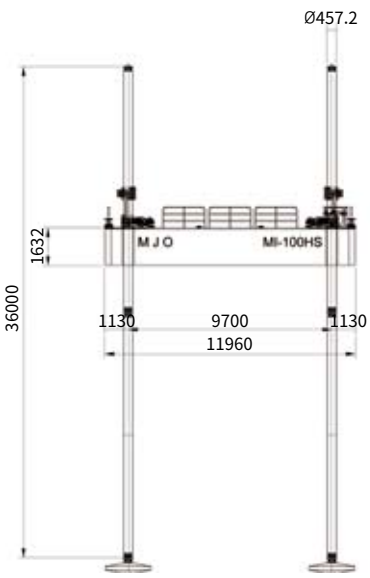

PRODUCT DESCRIPTION FOR MODULAR JACK-UP BARGE

MODULAR DESCRIPTION

MI-30T

GENERAL		
TYPE		hydraulic
CLASSIFICATION		none
MODEL		MI-30T
SPUD GENERAL		
LENGTH		36 m
DIAMETER		Ø508 mm
Q'TY	11m*3	4 unit
HYDRAULIC SYSTEM		
JACKING SPEED		15 m/hour
JACKING STROKE		1.05 m
MAX. DECKLOAD		4 ton/m^2
WORKING AREA		180 m^2
MAX. PAY-LOAD		30 ton
SURVIVAL CONDITIONS		
MAX. WATER DEPTH		30 m
WIND VELOCITY		5.5 ~ 7.9 m/sec
MAX. WAVE HEIGHT		1 ~ 2 m
CURRENT VELOCITY		4 knot
MAIN PLATFORM DIMENSIONS		
LENGTH		16.8 m
WIDTH		12 m
DEPTH		1.64 m
DRAFT		1 m
OPERATING CONDITIONS		
MAX. WATER DEPTH		30 m
WIND VELOCITY		3.4 ~ 5.4 m/sec
MAX. WAVE HEIGHT		0.5 ~ 1.0 m
CURRENT VELOCITY		4 knot
MOORING SYSTEM (OPTIONAL)		
WINCH		4 ea
ANCHOR		4 ea
POWER PACK		
POWER PACK		1 unit

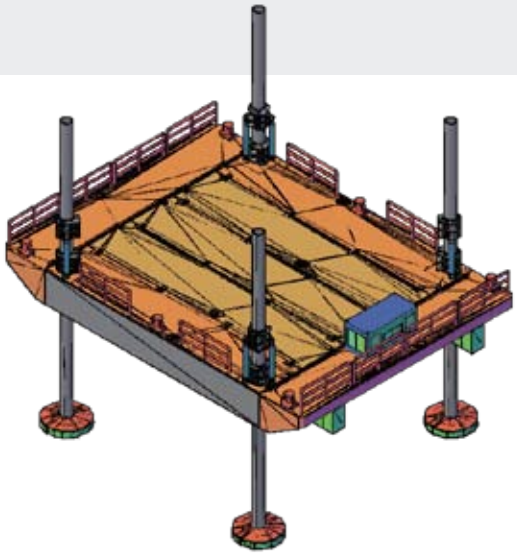

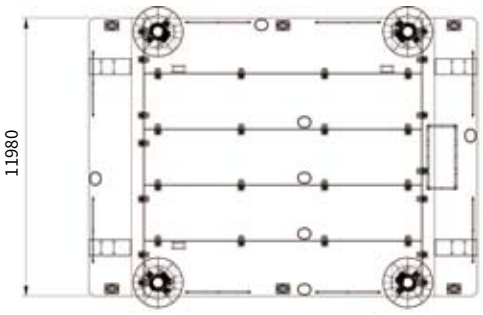

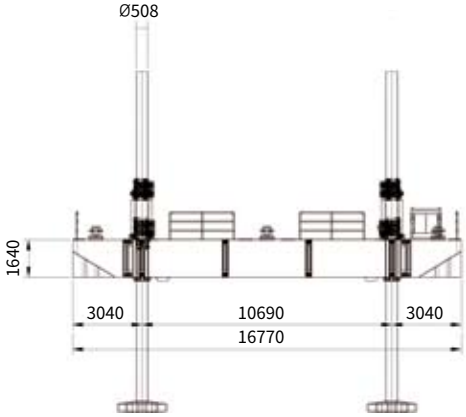

PRODUCT DESCRIPTION FOR MODULAR JACK-UP BARGE

MODULAR DESCRIPTION

MI-300T

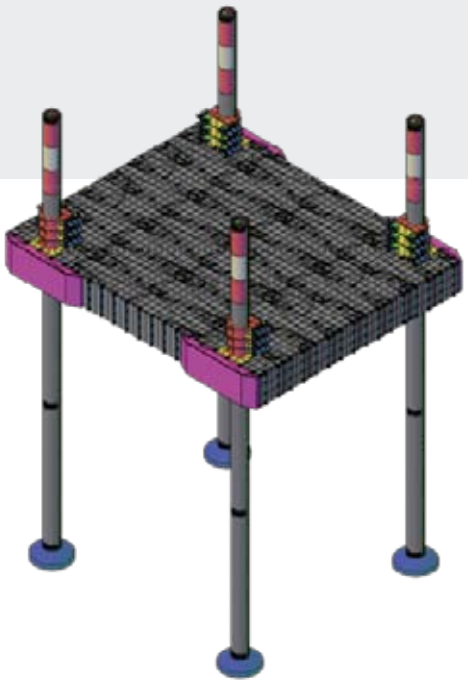

JACK-UP GENERAL	
MODEL	MI-300T
CLASSIFICATION	TBD
JACKING SYSTEM	RACK & PINION
MAX. DECKLOAD	7 ton/m^2
WORKING AREA	400 m^2
SPUD DIA * L	Ø1220*12m*3ea=36m, 4 sets
JACKING SYSTEM	
JACKING MOTOR	MI-RNP200
JACKING SPEED	40 m/hour
MAX. LIFTING CAPACITY	1,200 ton
HOLDING CAPACITY	1,560 ton
MAX. PAY-LOAD	300 ton
MAIN PLATFORM DIMENSIONS	
LENGTH	24.37 m
BREADTH	19.49 m
DEPTH	2.58 m
DRAFT	2.00 m
OPERATION CONDITIONS	
MAX. WATER DEPTH	26 m
WIND VELOCITY	3.4 ~ 5.4 m/sec
MAX. WAVE HEIGHT	0.5 ~ 1.0 m
CURRENT VELOCITY	4 knot
SURVIVAL CONDITIONS	
WATER DEPTH	26 m
WIND VELOCITY	8.0 ~ 10.7 m/sec
MAX. WAVE HEIGHT	2.0 ~ 3.0 m
CURRENT VELOCITY	6 knot
AIR GAP	4.0 m
MOORING SYSTEM(OPTIONAL)	
WINCH	4 ea
ANCHOR	4 ea
POWER PACK	
POWER PACK	2 unit

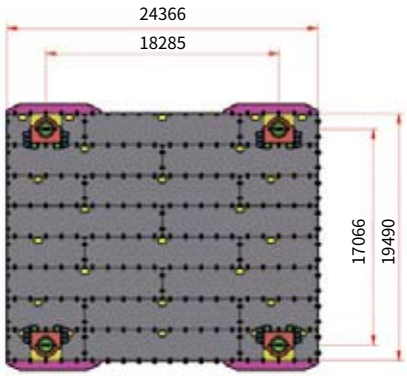

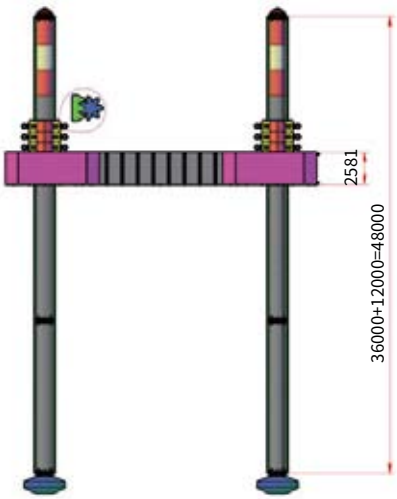

PRODUCT DESCRIPTION FOR MODULAR JACK-UP BARGE

MODULAR DESCRIPTION
MI-450T

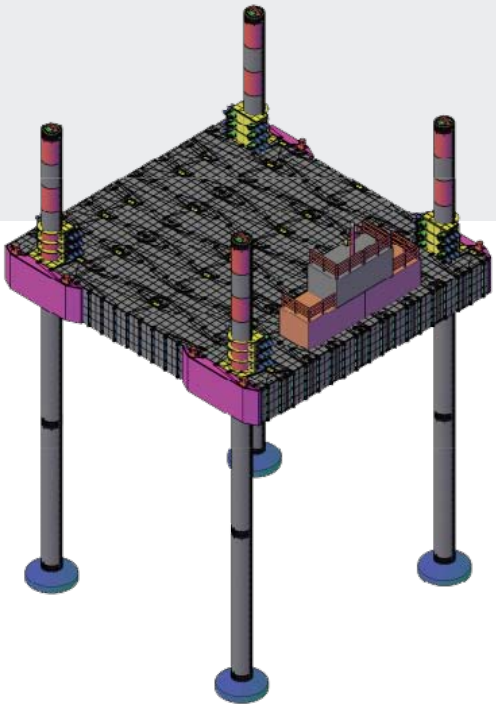

JACK-UP GENERAL	
MODEL	MI-450T
CLASSIFICATION	TBD
JACKING SYSTEM	RACK & PINION
MAX. DECKLOAD	7 ton/m^2
WORKING AREA	450 m^2
SPUD DIA * L	Ø1400*12m*3ea=36m, 4 sets
JACKING SYSTEM	
JACKING MOTOR	MI-RNP200
JACKING SPEED	40 m/hour
MAX. LIFTING CAPACITY	1,200 ton
HOLDING CAPACITY	1,560 ton
MAX. PAY-LOAD	450 ton
MAIN PLATFORM DIMENSIONS	
LENGTH	24.38 m
BREADTH	21.94 m
DEPTH	2.89 m
DRAFT	2.20 m
OPERATION CONDITIONS	
MAX. WATER DEPTH	26 m
WIND VELOCITY	3.4 ~ 5.4 m/sec
MAX. WAVE HEIGHT	0.5 ~ 1.0 m
CURRENT VELOCITY	4 knot
SURVIVAL CONDITIONS	
WATER DEPTH	26 m
WIND VELOCITY	8.0 ~ 10.7 m/sec
MAX. WAVE HEIGHT	2.0 ~ 3.0 m
CURRENT VELOCITY	6 knot
AIR GAP	4.0 m
MOORING SYSTEM(OPTIONAL)	
WINCH	4 ea
ANCHOR	4 ea
POWER PACK	
POWER PACK	4 unit

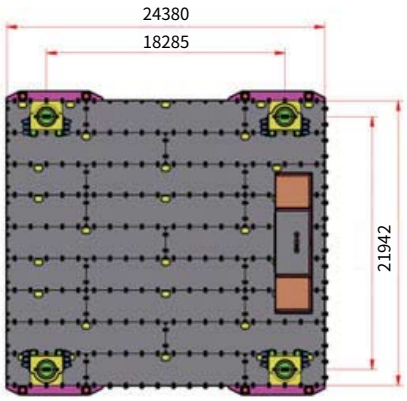

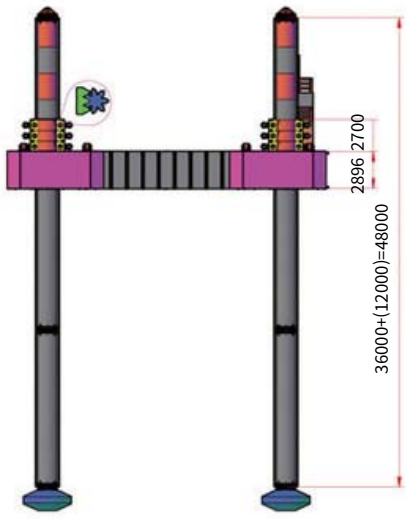

PRODUCT DESCRIPTION FOR MODULAR JACK-UP BARGE

MODULAR DESCRIPTION

MI-600T

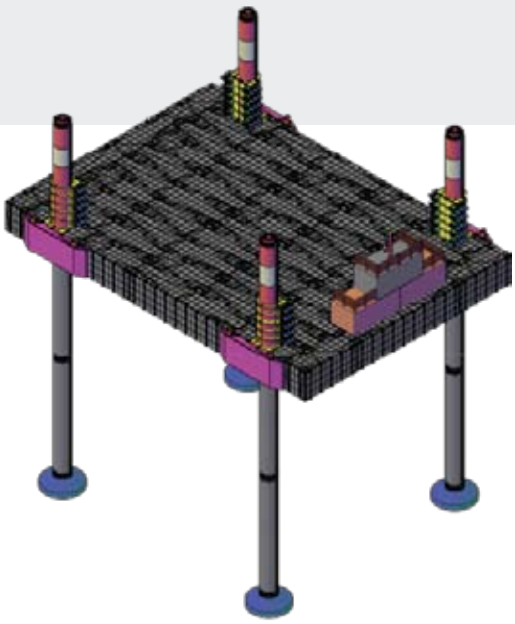

JACK-UP GENERAL	
MODEL	MI-600T
CLASSIFICATION	TBD
JACKING SYSTEM	RACK & PINION
MAX. DECKLOAD	7 ton/m^2
WORKING AREA	550 m^2
SPUD DIA * L	Ø1400*12m*4ea=48m, 4 sets
JACKING SYSTEM	
JACKING MOTOR	MI-RNP200
JACKING SPEED	40 m/hour
MAX. LIFTING CAPACITY	1,600 ton
HOLDING CAPACITY	2,080 ton
MAX. PAY-LOAD	600 ton
MAIN PLATFORM DIMENSIONS	
LENGTH	30.48 m
BREADTH	21.94 m
DEPTH	2.89 m
DRAFT	2.20 m
OPERATION CONDITIONS	
MAX. WATER DEPTH	37 m
WIND VELOCITY	3.4 ~ 5.4 m/sec
MAX. WAVE HEIGHT	0.5 ~ 1.0 m
CURRENT VELOCITY	4 knot
SURVIVAL CONDITIONS	
WATER DEPTH	37 m
WIND VELOCITY	10.8 ~ 13.8 m/sec
MAX. WAVE HEIGHT	3.0 ~ 4.0 m
CURRENT VELOCITY	6 knot
AIR GAP	5.0 m
MOORING SYSTEM(OPTIONAL)	
WINCH	4 ea
ANCHOR	4 ea
POWER PACK	
POWER PACK	4 unit

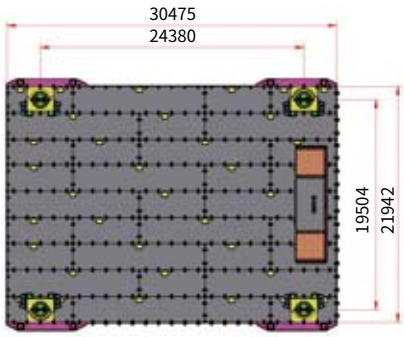

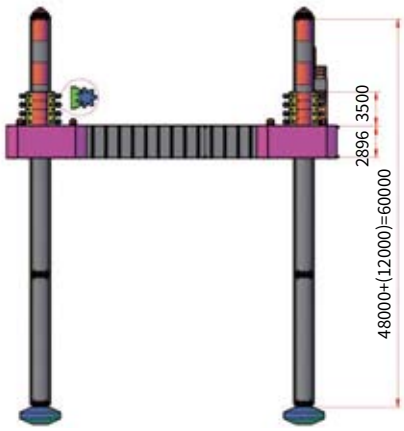

PRODUCT DESCRIPTION FOR MODULAR JACK-UP BARGE

MODULAR DESCRIPTION
MI-900T

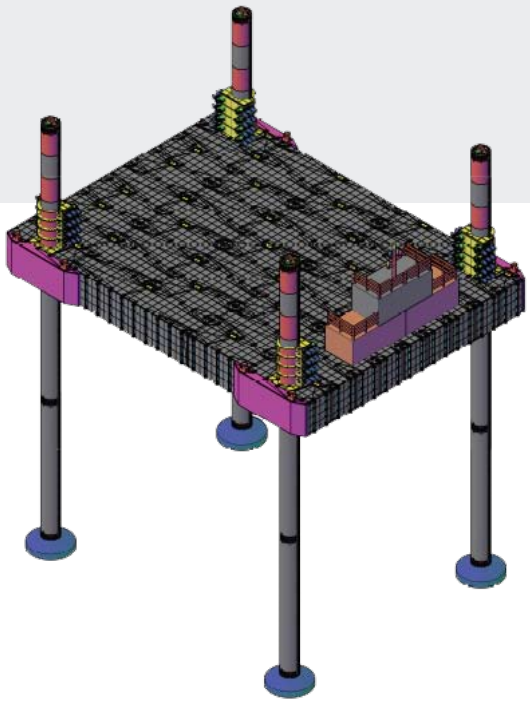

JACK-UP GENERAL	
MODEL	MI-900T
CLASSIFICATION	TBD
JACKING SYSTEM	RACK & PINION
MAX. DECKLOAD	7 ton/m^2
WORKING AREA	750 m^2
SPUD DIA * L	Ø1540*12m*4ea=48m, 4 sets
JACKING SYSTEM	
JACKING MOTOR	MI-RNP200
JACKING SPEED	40 m/hour
MAX. LIFTING CAPACITY	2,000 ton
HOLDING CAPACITY	2,600 ton
MAX. PAY-LOAD	900 ton
MAIN PLATFORM DIMENSIONS	
LENGTH	35.34 m
BREADTH	26.37 m
DEPTH	2.89 m
DRAFT	2.40 m
OPERATION CONDITIONS	
MAX. WATER DEPTH	37 m
WIND VELOCITY	3.4 ~ 5.4 m/sec
MAX. WAVE HEIGHT	0.5 ~ 1.0 m
CURRENT VELOCITY	4 knot
SURVIVAL CONDITIONS	
WATER DEPTH	37 m
WIND VELOCITY	10.8 ~ 13.8 m/sec
MAX. WAVE HEIGHT	3.0 ~ 4.0 m
CURRENT VELOCITY	6 knot
AIR GAP	5.0 m
MOORING SYSTEM(OPTIONAL)	
WINCH	4 ea
ANCHOR	4 ea
POWER PACK	
POWER PACK	4 unit

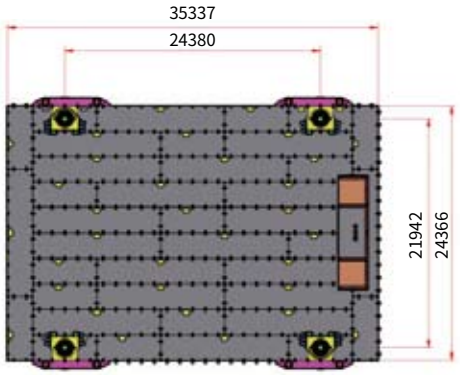

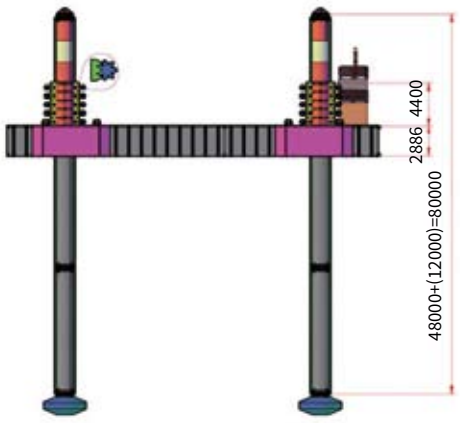

PRODUCT DESCRIPTION FOR MODULAR JACK-UP BARGE

JACKING GEAR SYSTEM (RACK & PINION)

The Jacking Gear System (Rack & Pinion) developed by MYUNG IL JACKUP OFFSHORE in Korea is a speciallized rack and pinion gear type jacking system designed primarily for offshore platforms, barges, rigs, and similar applications. Unlike traditional systems driven by electric or hydraulic motors and reducers, the JGS operates using hydraulic cylinders for its activation.

▶ Rack and Pinion Gear Type

- **Hydraulic Cylinder Activation :** Instead of eletric motors or traditional hydraulic motors with reducers, the JGS utilizes hydraulic cylinders for its operation. This choice may offer advantages such as simpler maintenance, higher reliability, and potentially greater control over lifting speeds and forces.
- **Modular Design :** The jacking system is modular, with one module typically consisting of two JGS units. These modules can be arranged vertically to increase the lifting power, allowing for the handling of heavier loads as required in offshore operations.
- **Customizability :** Depending on specific project requirements, the JGS can likely be customized in terms of size, lifting capacity, and integration with other systems.

Jacking System Technical Data

▪ MI-RNP-30TON

Load Cases	Rated Load per Pinion	Jacking Speed
Normal Jacking	30 MT	40 m/hour
Preload Jacking	39 MT	40 m/hour
Normal Holding	51 MT	
Storm Holding	63 MT	
Design Temperature	-15℃~40℃	

▪ MI-RNP-60TON

Load Cases	Rated Load per Pinion	Jacking Speed
Normal Jacking	60 MT	40 m/hour
Preload Jacking	78 MT	40 m/hour
Normal Holding	102 MT	
Storm Holding	126 MT	
Design Temperature	-15℃~40℃	

▪ MI-RNP-90TON

Load Cases	Rated Load per Pinion	Jacking Speed
Normal Jacking	90 MT	40 m/hour
Preload Jacking	117 MT	40 m/hour
Normal Holding	153 MT	
Storm Holding	189 MT	
Design Temperature	-15℃~40℃	

Jacking Control System Software

1. Spud Control

- Visualization of spud movement distance through spud length monitoring
- Visualization of the tilting status of the bow and stern as well as the port and starboard sides
- Individual operation of each spud and synchronized operation of the four(4) spuds
- Platform auto balancing function using angle sensors
- Operation and fault monitoring of the jacking gear system
- Fault monitoring of the hydraulic solenoid valve based on current measuring

2. Monitoring and Control of High-pressure Hydraulic Power

3. Utility Monitoring

- Water level monitoring
- Fuel level monitoring
- Hydraulic oil level monitoring

4. Monitoring the MAIN hydraulic pressure of the HPU unit and integrating fault and alarm setting control

The MI Jacking System can change the torque value by modifying the rows and columns as shown in the picture below.

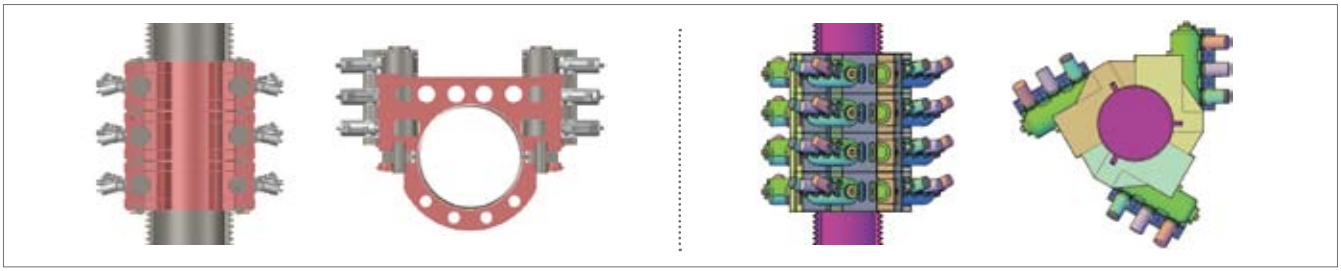

With the world's best technology and products,
we open up the era of eco-friendly energy



MYUNG IL
JACKUP OFFSHORE CO.,LTD

4, Saemangeumsandan 1-ro, Gunsan-si, Jeollabuk-do, Republic of Korea
Tel : +82-63-464-1700 Fax : +82-63-464-1701
E-mail : mijo@sep-barge.com