MI-100HS
General Arrangement

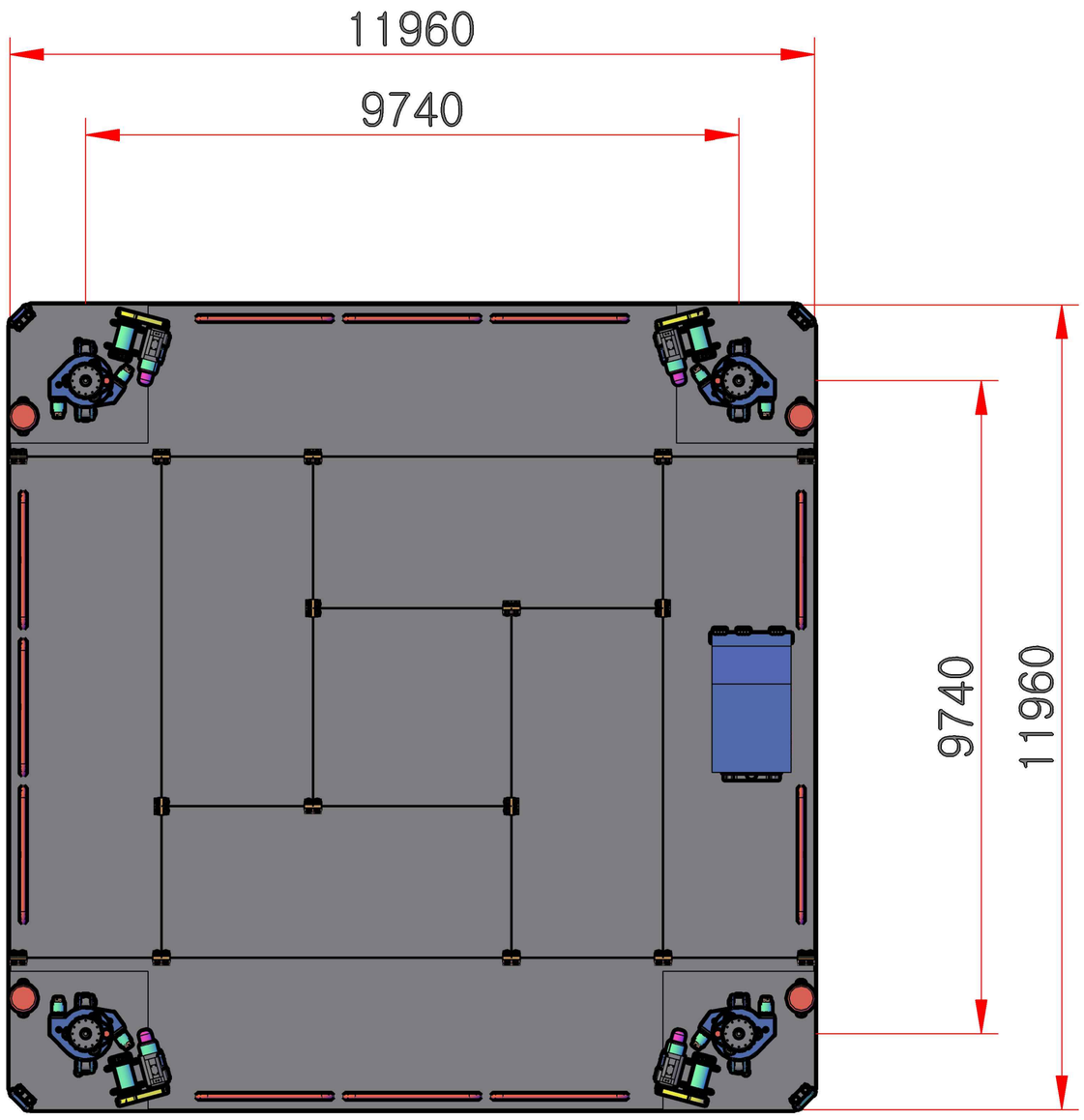

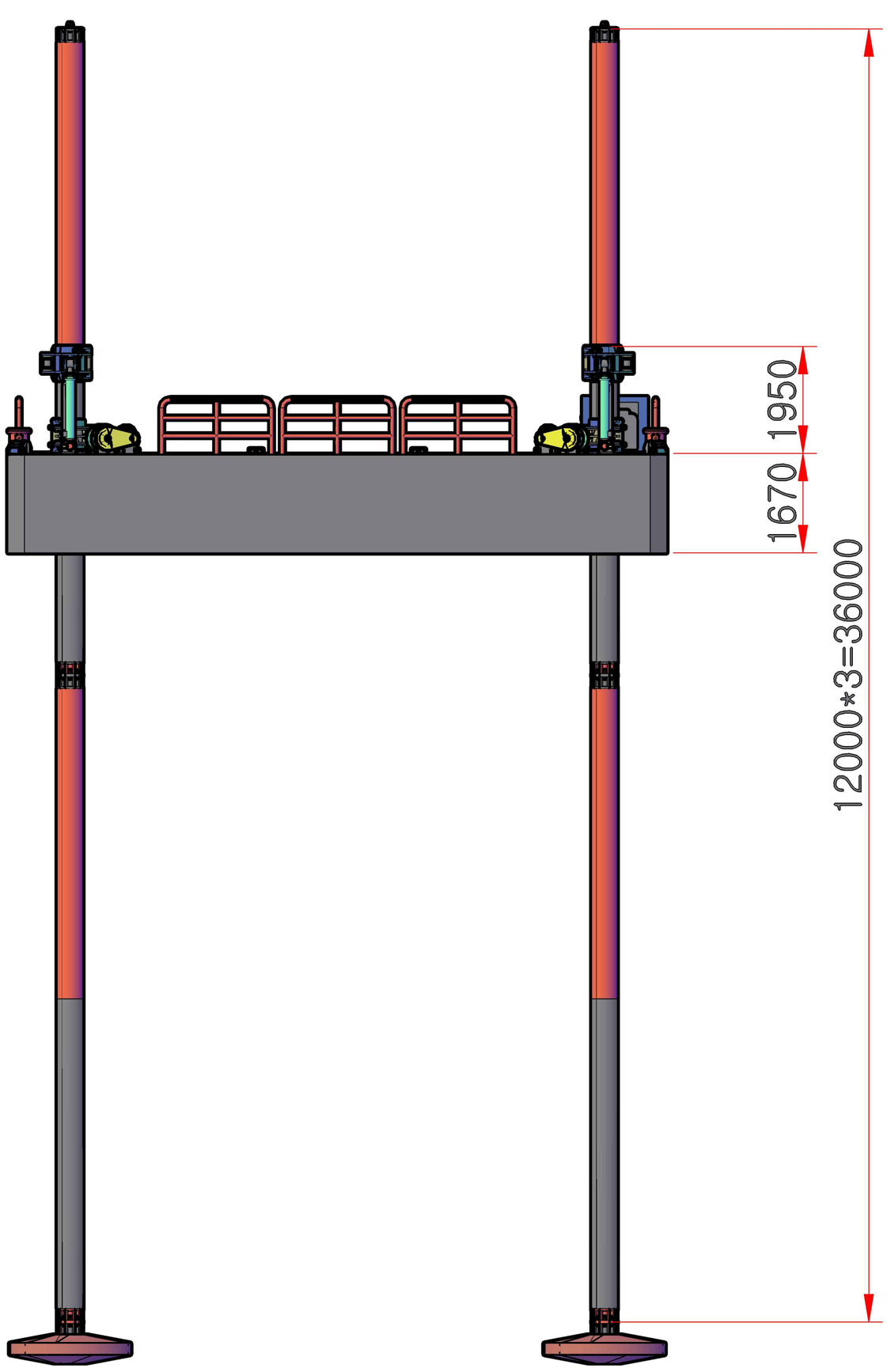

BIBLIOGRAPHY

1. 2023.05.10 MYUNG IL JACK-UP OFFSHORE DESIGN

PRINCIPAL DIMENSIONS

LENGTH	OVER ALL	11.960M
BREADTH	(MLD.)	11.960M
DEPTH	(MLD.)	1.670M
DRAFT	(D.L.W.L)	1.000M

Jack-up General

Ship Name	MI-100HS
Class	KOMSA
Jacking System	Hyd. Cylinder
A-Pontoon : 2260*7480*1670 = 2 CAN	
B-Pontoon : 2260*5220*1670 = 4 CAN	
Moonpool : 2960*1480*300 = 2 CAN	
Jacking Pontoon : 2260*11960*1670 = 2 CAN	
Spud Dia*L : ø457.2*12*3=36M, 4 sets	
Max. Deck Load	2 ton/m²
Working Area	120 m²

Jacking System

Jacking Speed	20	meter/hr
Max. Lifting Capacity	150	ton
Holding Capacity	195	ton
Payload	18	ton
Engine Hydraulic Power Pack : 1 unit		

Mooring System

Winch*4ea Capacity : 4 ton/ea * 1 drum	
Anchor*4ea : 0.150 ton Korea Type	

Operating Conditions

Max. Water Depth	30	meter
Wind Velocity	7	meter/sec.
Max. Wave Height	1.0	meter
Current Velocity	1.0	meter/sec.

Survival Conditions

Water Depth	30	meter
Wind Velocity	15	meter/sec.
Wave Height	1.5	meter
Current Velocity	1.5	meter/sec.
Air Gap	1.5	meter

P.M	munyong,Kim
APP'D	Kim,munyong
CH'D	Yoon,jongho
DES'N	Kim,
DR'N	Yoon,jongho
SCALE	
CAD FILE NAME	

CLIENT: M I J O CO., LTD.

PROJECT: MODULAR JACK-UP BARGE

TITLE: MI-100HS

GENERAL ARRANGEMENT

(주) 명 일 잭 업 해 양
MYUNG IL JACK-UP OFFSHORE CO.,LTD

JOB No. | DWG No. | REV.